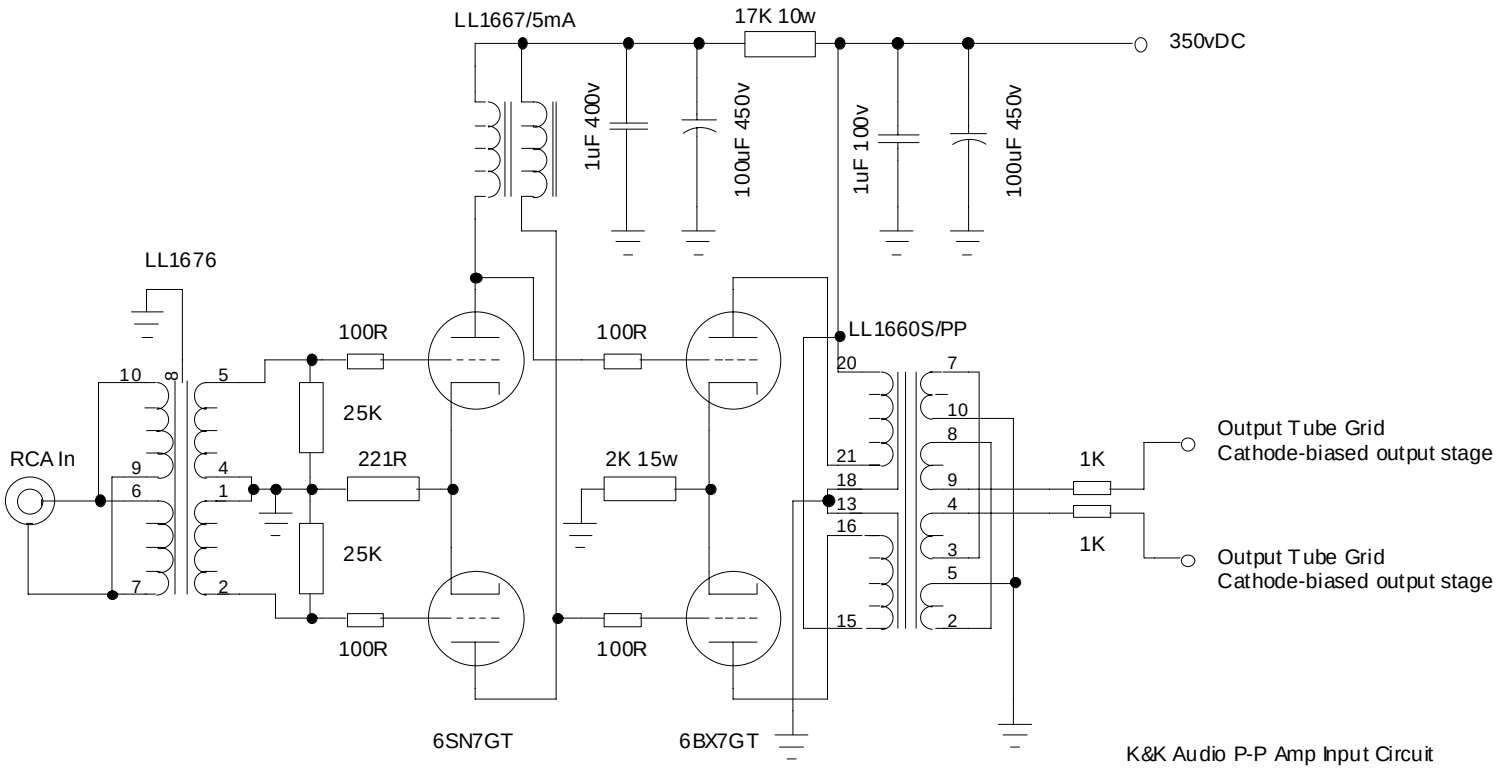

K&K Audio P-P Amp Input Circuit
March 2003, updated August 2003
Copyright 2003