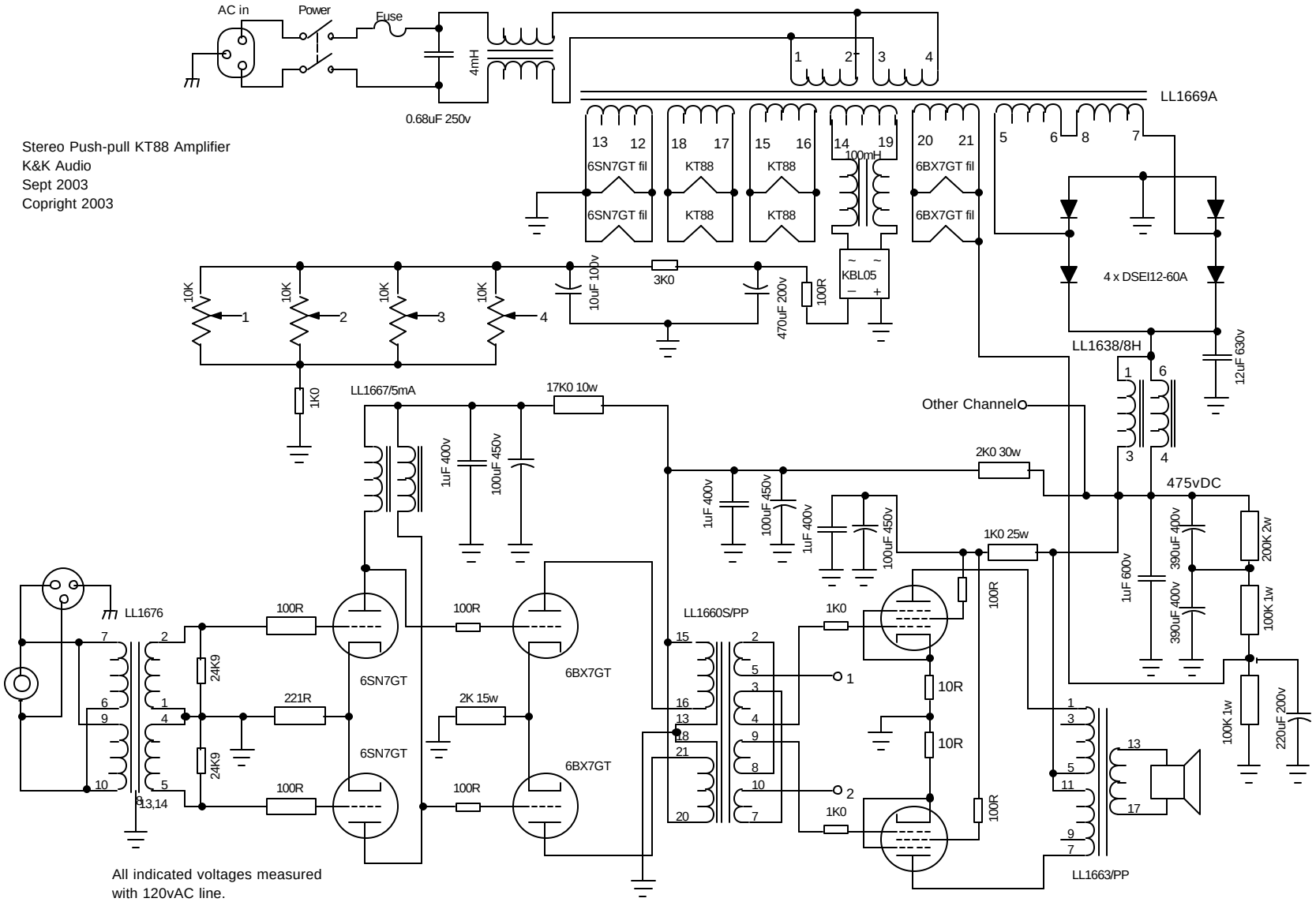Stereo Push-pull KT88 Amplifier
K&K Audio
Sept 2003
Copright 2003