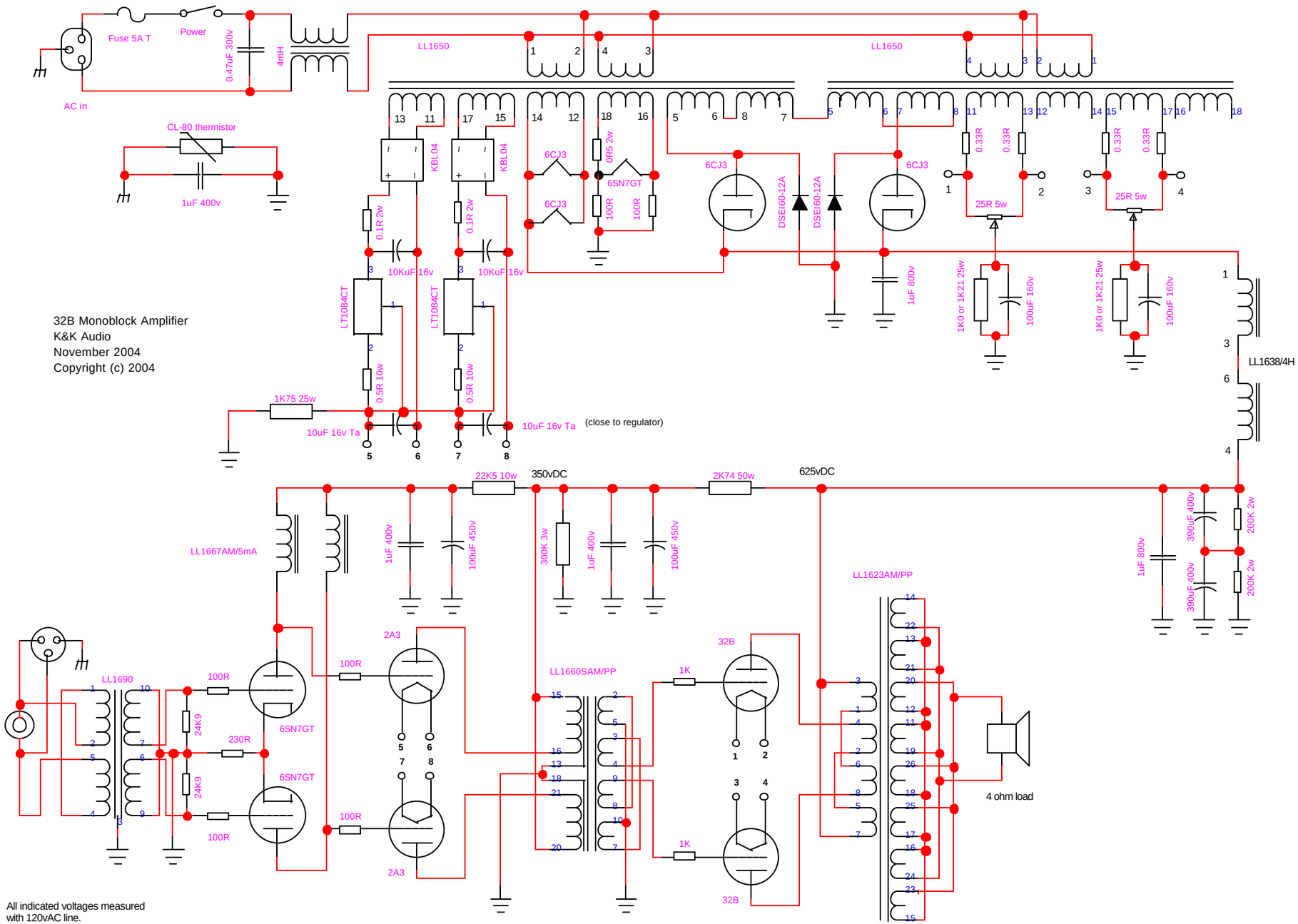
32B Monoblock Amplifier
K&K Audio
November 2004
Copyright (c) 2004
Fuse 5A T
Power
0.47uF 300v
4mH
AC in
LL1650
LL1650
CL-80 thermistor
1uF 400v
KBL04
KBL04
0.1R 2w
0.1R 2w
10KuF 16v
10KuF 16v
LT1084CT
LT1084CT
0.5R 10w
0.5R 10w
1K75 25w
10uF 16v Ta
10uF 16v Ta
(close to regulator)
6CJ3
6CJ3
6CJ3
0R5 2w
6SN7GT
100R
100R
DSEI60-12A
DSEI60-12A
6CJ3
1uF 800v
0.33R
0.33R
0.33R
0.33R
25R 5w
25R 5w
1K0 or 1K21 25w
100uF 160v
1K0 or 1K21 25w
100uF 160v
LL1638/4H
22K5 10w
350vDC
2K74 50w
625vDC
LL1667AM/5mA
1uF 400v
100uF 450v
300K 3w
1uF 400v
100uF 450v
1uF 800v
390uF 400v
200K 2w
390uF 400v
200K 2w
LL1623AM/PP
LL1690
100R
24K9
230R
24K9
100R
6SN7GT
6SN7GT
100R
100R
2A3
2A3
LL1660SAM/PP
1K
1K
32B
32B
4 ohm load
All indicated voltages measured
with 120vAC line.